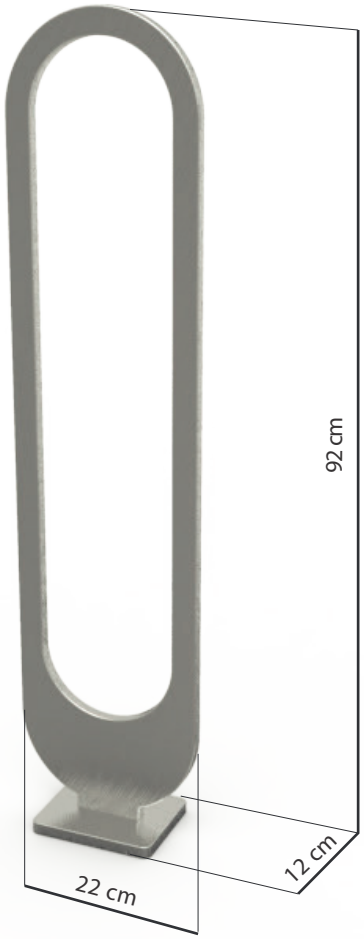

GENERAL TECHNICAL DATA

dimensions:
- height: 92 cm
- height with anchoring section: 121 cm
- width: 22 cm
- depth: 12 cm

weight:
- attached by bolts to foundation: 9 kg
- embedded in concrete: 12 kg

materials: - stainless or carbon steel

DESCRIPTION

Welded structure made of 10 mm thick steel sheet, made of carbon steel s235Jr galvanised and powder-painted according to RAL palette, or made entirely of stainless steel 1.4301 ground. Two bicycles may be attached to the rack.

All items of street furniture must be properly anchored according to the manufacturer's technical instructions. The manufacturer shall not be liable for damage caused by negligent use or failure to follow the instructions.

product: ELLIPSIS bicycle rack 05.019

version: 1

designer: Filip Babiarz

In accordance with the Polish Law on Copyright and Related Rights of 04.02.1994 (Official Journal of Laws No. 24, item 83, corrected: Journal of Laws No. 43, item 170) and in accordance with the EU copyright legislation including all EU directives and regulations on copyright , Zano Mirosław Zarotyński Company, reserves the copyright of drawings, descriptions, 3D models, renderings, graphics, content contained in offers, attachments to offers and all other documents. Its content is the intellectual property of ZANO Miroslaw Zarotinski company. The use of author's ideas, solutions, copying, distribution of photos, graphics or fragments of graphics, descriptive texts, for profit, without the permission of the author - ZANO Mirosław Zarotyński company - is prohibited and constitutes a copyright infringement and is punishable.

FRONT VIEW

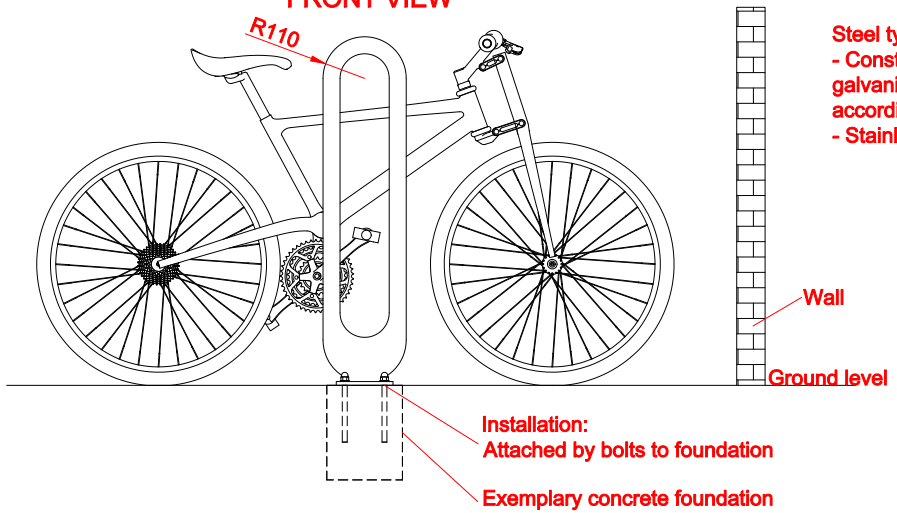

Steel types:
- Construction steel (S235JR, DC01) galvanized and powder coated according to RAL palette
- Stainless steel (1.4301) brushed

SIDE VIEW

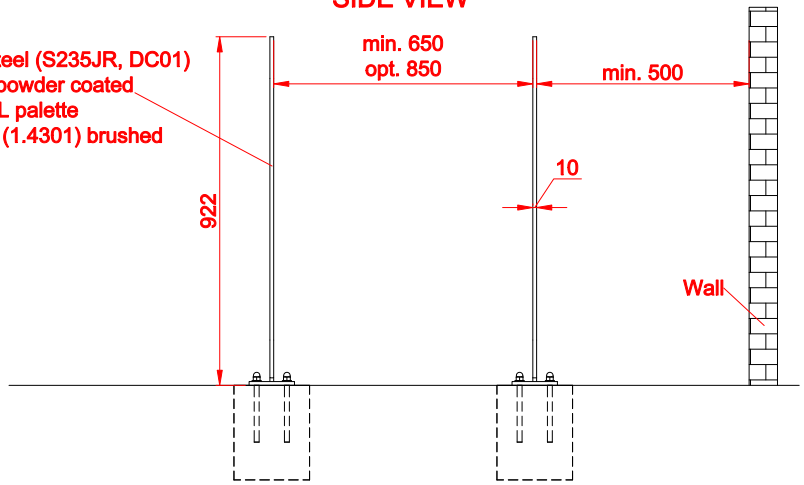

TOP VIEW

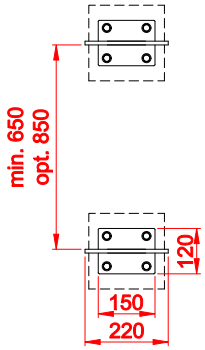

MOUNTING HOLES SPACING

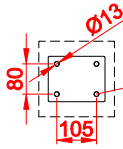

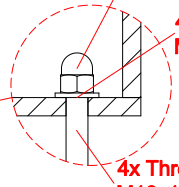

ISOMETRIC VIEW

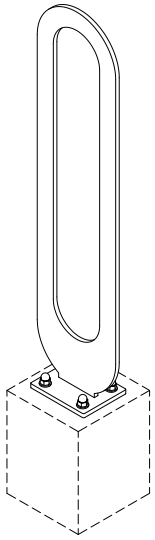

Dimensions given in [mm]

Ellipsis bicycle rack 05.019	ZANO Street Furniture Lindego 7A, 30-148 Cracow, Poland phone: +48 12 200 20 53 email: office@zano.pl
Number:	191218-v1
Sheet:	A4
Scale:	1:20
Mass:	attached by bolts to foundation 9 kg

In accordance with the Polish Law on Copyright and Related Rights of 04.02.1994 (Official Journal of Laws No. 24, item 83, corrected: Journal of Laws No. 43, item 170) and in accordance with the EU copyright legislation including all EU directives and regulations on copyright , Zano Miroslaw Zarotyński Company, reserves the copyright of drawings, descriptions, 3D models, renderings, graphics, content contained in offers, attachments to offers and all other documents. Its content is the intellectual property of ZANO Miroslaw Zarotinski company. The use of author's ideas, solutions, copying, distribution of photos, graphics or fragments of graphics, descriptive texts, for profit, without the permission of the author - ZANO Miroslaw Zarotyński company - is prohibited and constitutes a copyright infringement and is punishable.

FRONT VIEW

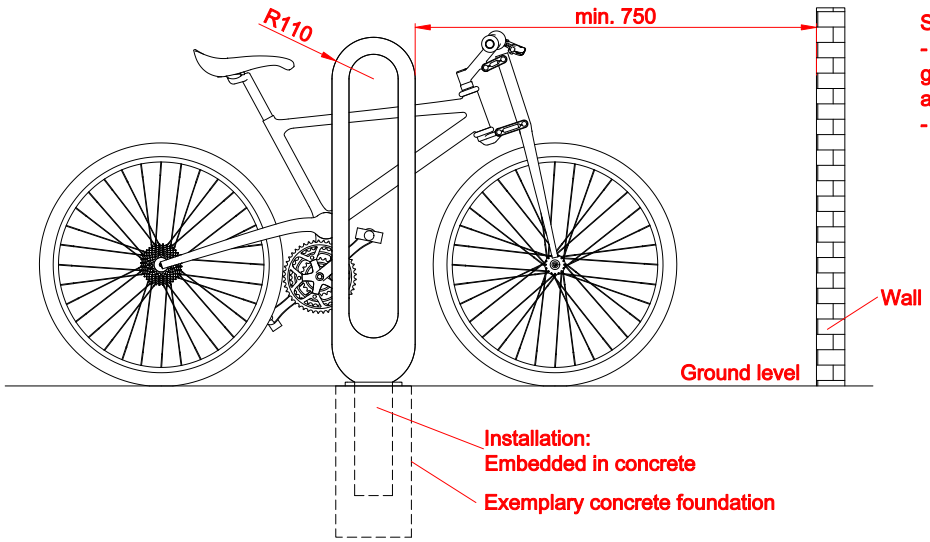

Steel types:
- Construction steel (S235JR, DC01) galvanized and powder coated according to RAL palette
- Stainless steel (1.4301) brushed

SIDE VIEW

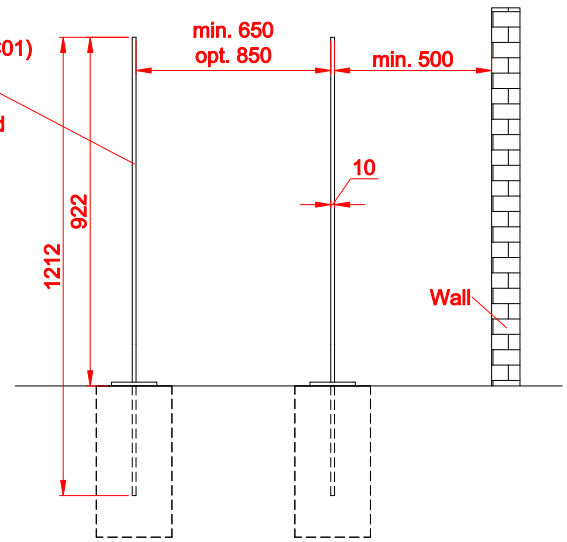

TOP VIEW

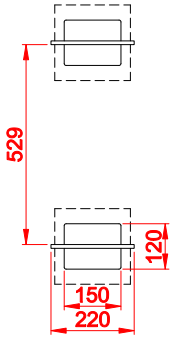

ISOMETRIC VIEW

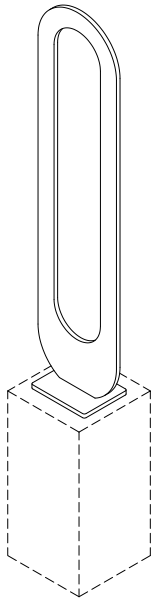

MOUNTING HOLES SPACING

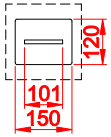

Dimensions given in [mm]

Ellipsis bicycle rack 05.019	ZANO Street Furniture Lindego 7A, 30-148 Cracow, Poland phone: +48 12 200 20 53 email: office@zano.pl
In accordance with the Polish Law on Copyright and Related Rights of 04.02.1994 (Official Journal of Laws No. 24, item 83, corrected: Journal of Laws No. 43, item 170) and in accordance with the EU copyright legislation including all EU directives and regulations on copyright , Zano Mirosław Zarotyński Company, reserves the copyright of drawings, descriptions, 3D models, renderings, graphics, content contained in offers, attachments to offers and all other documents. Its content is the intellectual property of ZANO Mirosław Zarotinski company. The use of author's ideas, solutions, copying, distribution of photos, graphics or fragments of graphics, descriptive texts, for profit, without the permission of the author - ZANO Mirosław Zarotyński company - is prohibited and constitutes a copyright infringement and is punishable.	Number: 191218-v1 Sheet: A4 Scale: 1:20 Mass: embedded in concrete 12 kg